Cambridge Assessment International Education

Cambridge International AS & A Level

CANDIDATE NAME									
CENTRE NUMBER						CANDIDATE NUMBER				

5745011940

PHYSICS **9702/33**

Paper 3 Advanced Practical Skills 1 **February/March 2020**

2 hours

You must answer on the question paper.

You will need: The materials and apparatus listed in the confidential instructions

INSTRUCTIONS

- Answer **all** questions.
- Use a black or dark blue pen. You may use an HB pencil for any diagrams or graphs.
- Write your name, centre number and candidate number in the boxes at the top of the page.
- Write your answer to each question in the space provided.
- Do **not** use an erasable pen or correction fluid.
- Do **not** write on any bar codes.
- You will be allowed to work with the apparatus for a maximum of 1 hour for each question.
- You should record all your observations in the spaces provided in the question paper as soon as these observations are made.
- You may use a calculator.
- You should show all your working and use appropriate units.

INFORMATION

- The total mark for this paper is 40.
- The number of marks for each question or part question is shown in brackets [ ].

For Examiner's Use	
1	
2	
Total	

This document has **12** pages. Blank pages are indicated.

© UCLES 2020

BLANK PAGE

You may not need to use all of the materials provided.

1 In this experiment you will investigate the oscillations of a rod.

(a) • Assemble the apparatus as shown in Fig. 1.1.

• Adjust the apparatus until the two springs are approximately 15 cm apart. Each spring should be vertical and the same distance from the middle of the rod. The rod should be parallel to the bench.

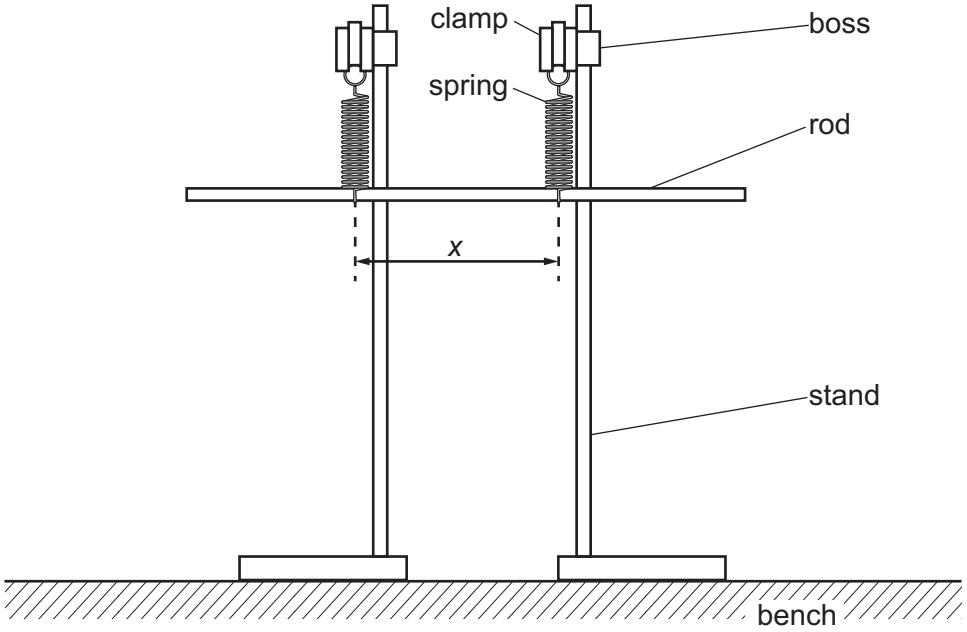

Fig. 1.1

• The distance between the two springs where they support the rod is x, as shown in Fig. 1.1. Measure and record x.

x = ... cm [1]

(b) • Lift one end of the rod a short distance and push the other end of the rod down a short distance. Release the rod so that it oscillates with a rocking motion, as shown in Fig. 1.2.

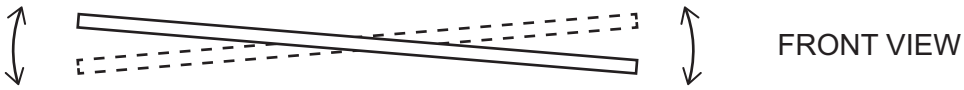

Fig. 1.2

• Take measurements to determine the period T of the oscillation.

T = ... s [2]

(c) • Change x by moving the stands. Adjust the apparatus until the springs are vertical and the rod is parallel to the bench. Measure x and T.

• Repeat until you have six sets of values of x and T.

• Record your results in a table. Include values of $\frac{1}{x}$ in your table.

[9]

(d) (i) Plot a graph of T on the y-axis against $\frac{1}{x}$ on the x-axis. [3]

(ii) Draw the straight line of best fit. [1]

(iii) Determine the gradient and y-intercept of this line.

gradient = ...

y-intercept = ...

[2]

© UCLES 2020

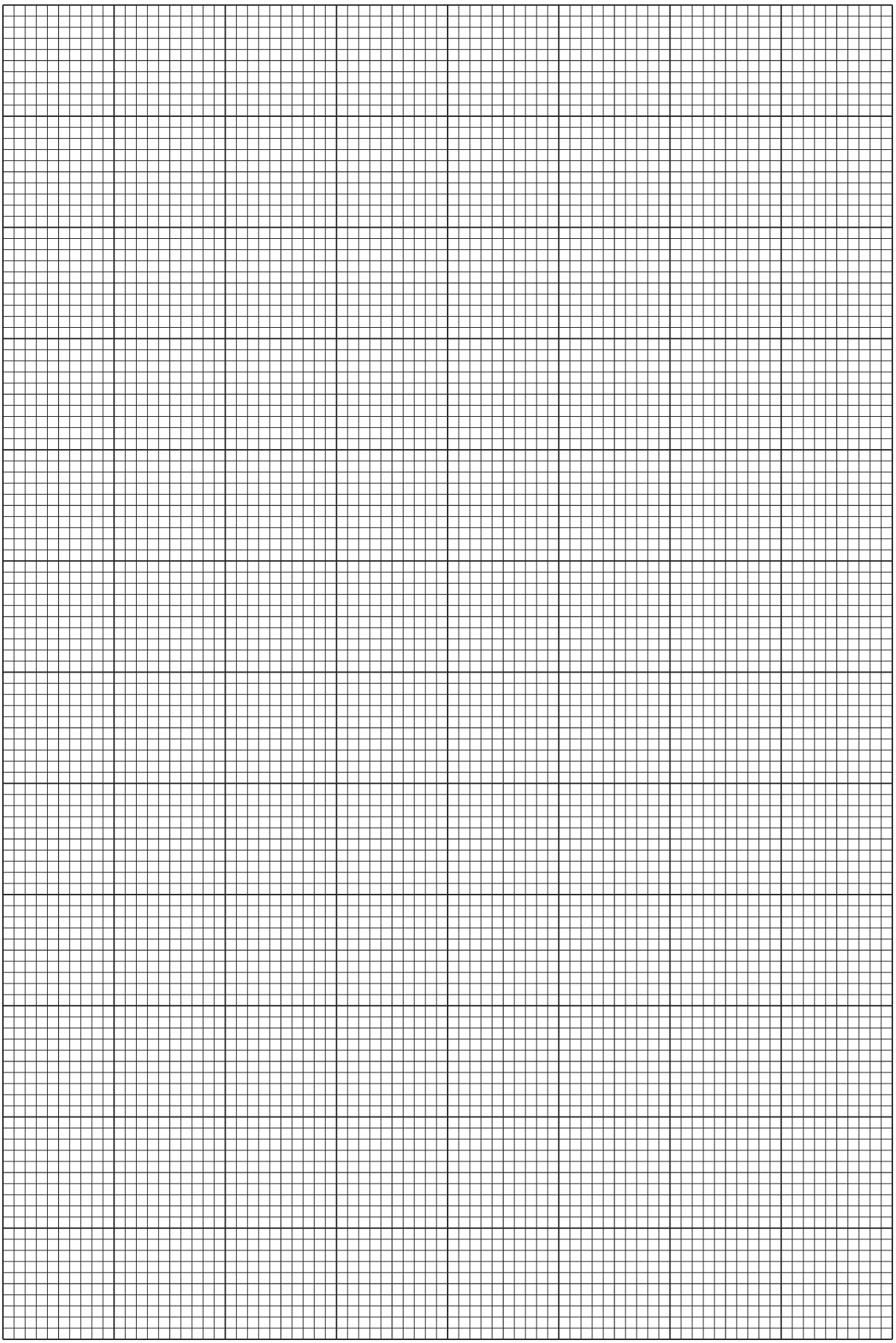

© UCLES 2020

[Turn over

(e) It is suggested that the quantities T and x are related by the equation

$$T = \frac{a}{x} + b$$

where a and b are constants.

Use your answers in **(d)(iii)** to determine the values of a and b.
Give appropriate units.

a = ...

b = ...
[2]

[Total: 20]

You may not need to use all of the materials provided.

2 In this experiment you will investigate the magnetic field produced by an electrical current.

(a) You are provided with a length of wire wrapped around a plastic channel to form a coil, as shown in Fig. 2.1.

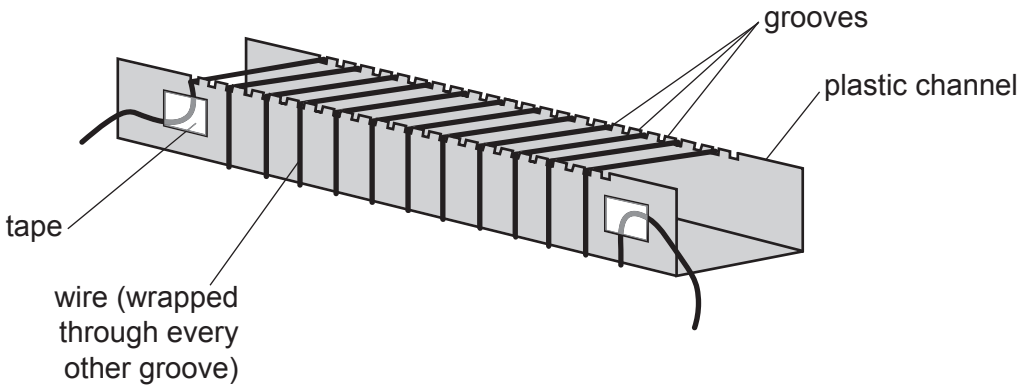

Fig. 2.1

Count and record the number *N* of turns of wire in the coil.

N = ... [1]

(b) • Slide the compass into the plastic channel so that it is in the middle of the coil.

• Connect the circuit as shown in Fig. 2.2.

• Rotate the channel on the bench until the arrow of the compass is perpendicular to the channel, as shown.

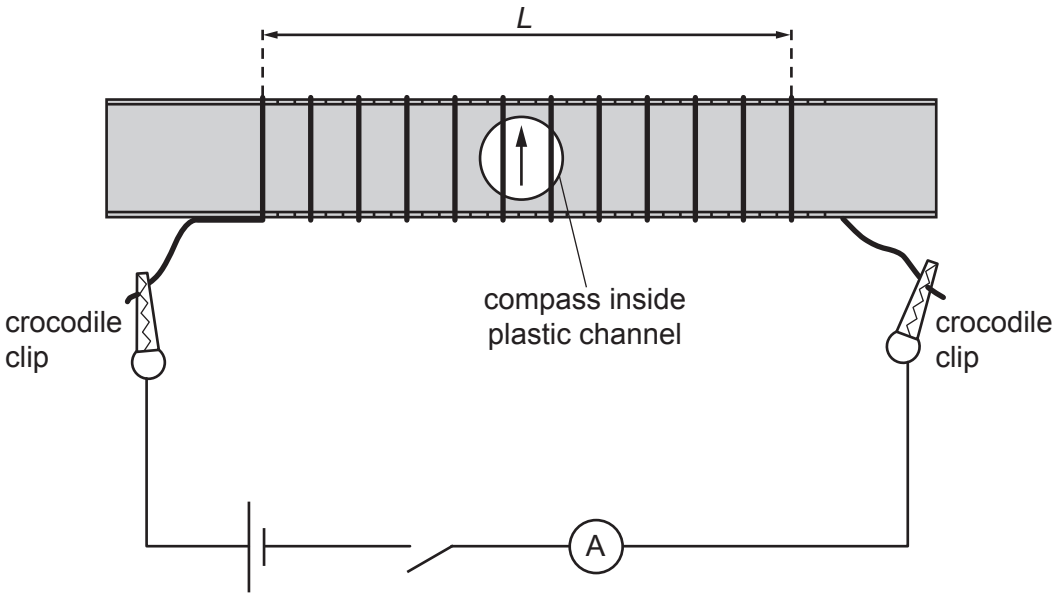

Fig. 2.2

• The distance between the first and last turns of wire is *L*, as shown in Fig. 2.2. Measure and record *L*.

L = ... [1]

(c) • Close the switch. The compass arrow will rotate through an angle θ.

• Measure and record θ.

θ = ... °

• Record the ammeter reading I.

I = ...

• Open the switch.

[2]

© UCLES 2020

(d) Estimate the percentage uncertainty in your value of θ.

percentage uncertainty = ... [1]

(e) Calculate the value of B using

$$B = \frac{\mu_0(N-1)\,I}{L}$$

where $\mu_0 = 1.26 \times 10^{-6}\,\text{NA}^{-2}$.

B = ... $\text{NA}^{-1}\text{m}^{-1}$ [1]

© UCLES 2020

[Turn over

(f) • Disconnect the crocodile clips and remove the compass.

• Remove the tape and the wire. Re-wind the wire in adjacent grooves (instead of every other groove), as shown in Fig. 2.3.

• Re-fix the tape.

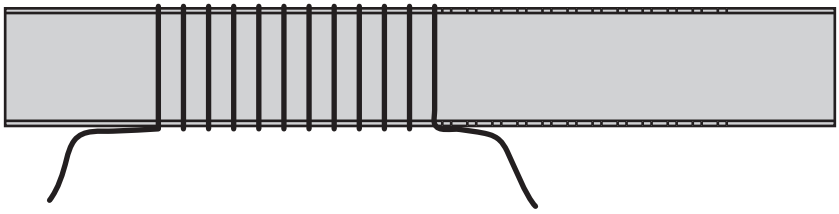

Fig. 2.3

• Repeat **(a)**, **(b)**, **(c)** and **(e)**.

N = ...

L = ...

θ = ... °

I = ...

B = ... $NA^{-1}m^{-1}$

[3]

(g) It is suggested that the relationship between θ and B is

$$\tan\theta = \frac{B}{k}$$

where k is a constant.

(i) Using your data, calculate two values of k.

first value of k = ...

second value of k = ...
[1]

(ii) Justify the number of significant figures you have given for your values of k.

.....

.....

..... [1]

(iii) Explain whether your results in **(g)(i)** support the suggested relationship.

.....

.....

..... [1]

(h) (i) Describe four sources of uncertainty or limitations of the procedure for this experiment.

1 .....

.....

2 .....

.....

3 .....

.....

4 .....

.....

[4]

(ii) Describe four improvements that could be made to this experiment. You may suggest the use of other apparatus or different procedures.

1 .....

.....

2 .....

.....

3 .....

.....

4 .....

.....

[4]

[Total: 20]

Permission to reproduce items where third-party owned material protected by copyright is included has been sought and cleared where possible. Every reasonable effort has been made by the publisher (UCLES) to trace copyright holders, but if any items requiring clearance have unwittingly been included, the publisher will be pleased to make amends at the earliest possible opportunity.

To avoid the issue of disclosure of answer-related information to candidates, all copyright acknowledgements are reproduced online in the Cambridge Assessment International Education Copyright Acknowledgements Booklet. This is produced for each series of examinations and is freely available to download at www.cambridgeinternational.org after the live examination series.

Cambridge Assessment International Education is part of the Cambridge Assessment Group. Cambridge Assessment is the brand name of the University of Cambridge Local Examinations Syndicate (UCLES), which itself is a department of the University of Cambridge.

© UCLES 2020